Yoke Mounting for 8.4 G-WIN Stand

99KK08Z00010
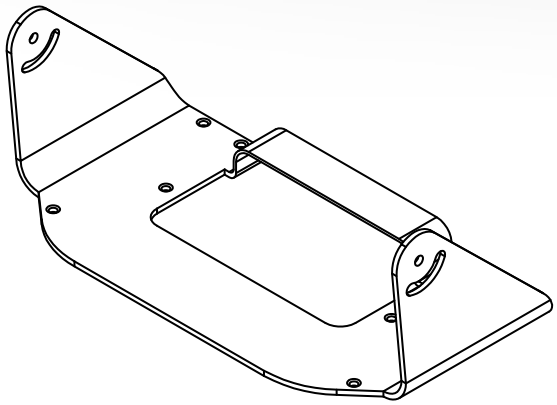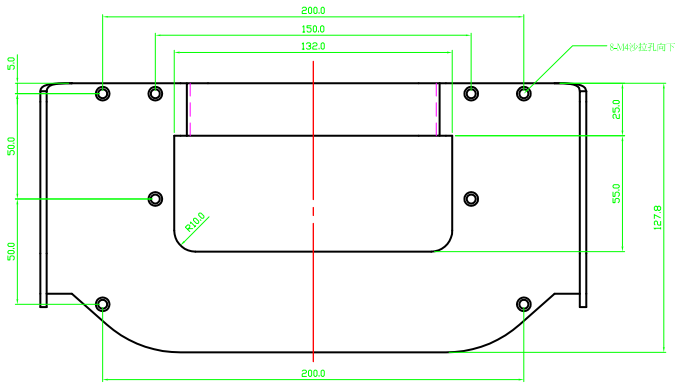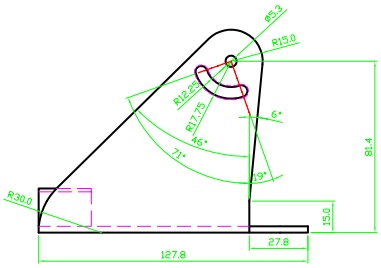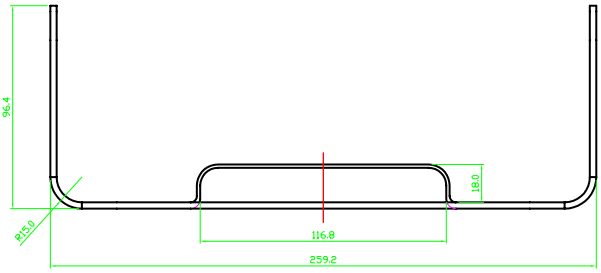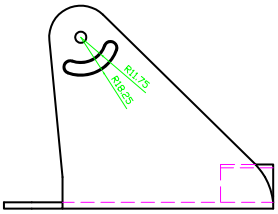
Mechanical Drawing